Cervoz Industrial Embedded Module

M.2 2242 NVMe

Titan Series (3D TLC)

T445 Family

Product Datasheet

Date: 2026.05.25

Revision: 1.1

File: Cervoz_Industrial_Embedded_Module_M.2_2242_T445_Datasheet_Rev1.1

Revision History

Date	Revision	Description
2025.06.02	1.0	First Released
2026.05.25	1.1	1.3 Ordering Information Added 2.2 Performance Updated

Table of Contents

1. Product Overview……4
1.1 Introduction……4
1.2 Feature……4~5
1.3 Product Appearance & Models……5

2. Product Specifications……6
2.1 General Specifications……6
2.2 Performance……7
2.3 Electronic Specifications……7
2.3.1 Block Diagram……7
2.3.2 Pin Assignment……8~10
2.4 Environmental Specifications……11
2.5 Mechanical Specifications……11~12

3. Supported Command……13
3.1 List of Command Sets……13

4. Part No. Decoder……14
4.1 Part No. Decoder……14~15

1. Product Overview

1.1 Introduction

Cervoz Industrial M.2 2242 Embedded Module T445 family is a Solid State Flash Disk product that is in compliance with the M.2 and PCIe Gen4x4 standards. The M.2 2242 T445 family is purpose-built for compact embedded systems and industrial environments where space, efficiency, and silent operation are critical. Featuring a slim 2242 form factor, the T445 is perfectly suited for slim fanless PCs, thin client systems, and low-profile motherboards. The M.2 2242 T445 family can be used for both booting and storage purposes.

The T445 family uses SSD grade quality 3D TLC flash memory from the industry leading manufacturer Micron. Cervoz's firmware builds in a powerful ECC algorithm call Low-Density Parity Check (LDPC) decoding to improve data reliability. Meanwhile, M.2 2242 T445 family features a DRAM-less design to achieve lower power consumption; along with a heatsink designed for effective heat dissipation to maintain the best performance. This product includes various capacities to choose from.

The T445 family offers outstanding performance and reliability; the product family is a perfect solution for multi-tasking capabilities and heavy work-load industrial applications.

1.2 Feature

- Compliant with PCIe Gen 4x4 interface (backward compatible to PCIe Gen3, Gen 2 and Gen 1)
- Compliance:
  - NVMe 2.0
  - PCI Express Base 4.0
- 3D TLC flash memory
- Capacity: 128GB ~ 2TB
- Write Protect Function (Optional)
- End-to-End data protection
- SLC write cache technology
- Thermal throttling
- Operating as boot disk
- Product includes Standard Temperature range & Wide Temperature range
- Low power consumption
- Static and dynamic wear leveling
- Bad block management
- S.M.A.R.T. & TRIM command
- Power Saving Modes:
  - Support APST
  - Support ASPM
  - Support L1.2
- Fully compatible with Windows 8.1/10/11, Mac OS, and Linux*

- RoHS compliant

*Microsoft recommends when use the M.2 NVMe SSD the driver for windows 8.1 and above is required.
Mac and Linux system users need to make sure whether there is a driver support M.2 NVMe SSD or not.

1.3 Product Appearance & Models

Cervoz Industrial M.2 2242 Module T445

Standard Temperature Default with Graphene Thermal Film	Wide Temperature Default With Heatsink

T445 Family Standard Temp. (0°C ~ 70°C) Model No.	T445 Family Wide Temp. (-40°C ~ 85°C) Model No.	Capacity
CIE-M4T445MLH128GS	CIE-M4T445MLH128GW	128GB
CIE-M4T445MMH128GS	CIE-M4T445MMH128GW	128GB
CIE-M4T445MLH256GS	CIE-M4T445MLH256GW	256GB
CIE-M4T445MMH256GS	CIE-M4T445MMH256GW	256GB
CIE-M4T445MNH256GS	CIE-M4T445MNH256GW	256GB*
CIE-M4T445MNH512GS	CIE-M4T445MNH512GW	512GB
CIE-M4T445MOH512GS	CIE-M4T445MOH512GW	512GB*
CIE-M4T445MNH001TS	CIE-M4T445MNH001TW	1TB
CIE-M4T445MOH001TS	CIE-M4T445MOH001TW	1TB
CIE-M4T445MOH002TS	CIE-M4T445MOH002TW	2TB

Please Note:

Since certain storage capacity has to be reserved for firmware and controller management purposes; the physical capacity of the flash module will be approximately 93.1% of the indicated capacity. If you need to install an image that has the exact (or close to) the indicated size of the flash module, please choose your flash module with a greater capacity.

2. Product Specifications

2.1 General Specifications

Form Factor	M.2 PCIe 2242
Interface	PCIe Gen 4x4 (backward compatible to PCIe Gen 3, Gen 2 and Gen 1)
Connector	M.2 2242 (M)
NAND Flash Type	3D TLC
Capacity	128GB/256GB/512GB/1TB/2TB
Sequential Read	up to 5,130MB/s
Sequential Write	up to 4,745MB/s
ECC Scheme	Applies the LDPC (Low Density Parity Check) of ECC algorithm
MTBF	>3,000,000 hours
TeraByte Written (TBW)*	128GB : 234, 256GB : 469, 512GB : 938, 1TB : 1875, 2TB : 3750
Low Power Management	APST/ASPM mode
Supply Voltage	3.3V DC +/-5%
Power Consumption	Active mode: < 5130mW Idle mode: < 805mW
Dimension (LxWxH)	42.00*22.00*3.50mm
Weight (net)	4.86 ± 1g

*TBW is tested using Windows Burn-in Test v8.1 Pro, primarily based on sequential write.

2.2 Performance

The performance was measured with below PC configuration:

- Platform: ASRock Z590M Pro4
- RAM: Cervoz CIR-S4DUSY3216G (DDR4 16G 3200MHz)
- Operation Systems: Win10 64bit
- Testing Utility: Crystal Disk Mark v8.0.5 x64 and IOMeter, 1GB range
- PCIe Gen4 performance

Capacity	128GB	256GB	512GB	1TB	2TB
Sequential Read (Q8T1)	2,300 MB/s	4,695 MB/s 2,535 MB/s*	5,095 MB/s 2,540 MB/s*	5,130 MB/s	4,995 MB/s
Sequential Write (Q8T1)	745 MB/s	1,450 MB/s 1,495 MB/s*	2,945 MB/s 2,410 MB/s*	4,730 MB/s	4,745 MB/s
4KB Random Read (Q128T16)	220K IOPS	450K IOPS 370K IOPS*	660K IOPS 390K IOPS*	620K IOPS	530K IOPS
4KB Random Write (Q128T16)	140K IOPS	220K IOPS	530K IOPS 460K IOPS*	800K IOPS	750K IOPS

Actual performance might differ based on different using conditions and environment.
*Performance is based on different NAND Flash IC.

2.3 Electronic Specifications

2.3.1 Block Diagram

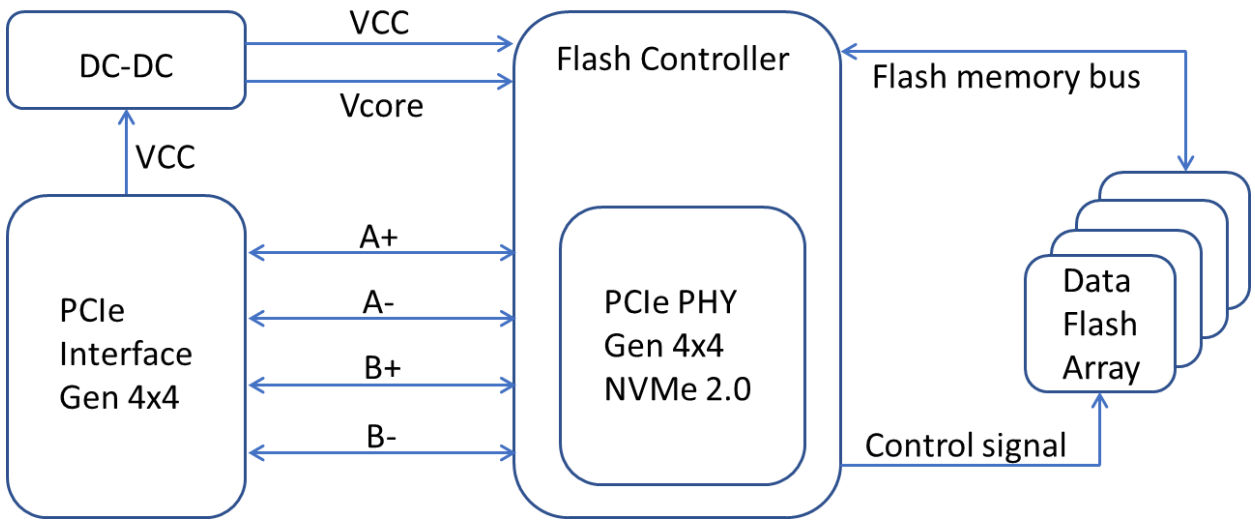

2.3.2 Pin Assignment

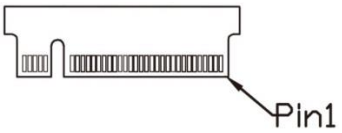

Pin #	Pin Description	Signal Name	Pin #	Pin Description	Signal Name
1	Ground	GND	10	Status indicators via LED devices	LED1#(O)
2	3.3V power in	+3.3V	11	PCIe RX Differential signal defined by the PCI Express M.2 spec	PERn3
3	Ground	GND	12	3.3V power in	+3.3V
4	3.3V power in	+3.3V	13	PCIe RX Differential signal defined by the PCI Express M.2 spec	PERp3
5	PCIe TX Differential signal defined by the PCI Express M.2 spec	PETn3	14	3.3V power in	+3.3V
6	Not Used	NC	15	Ground	GND
7	PCIe TX Differential signal defined by the PCI Express M.2 spec	PETp3	16	3.3V power in	+3.3V
8	Not Used	NC	17	PCIe TX Differential signal defined by the PCI Express M.2 spec	PETn2
9	Ground	GND	18	3.3V power in	+3.3V

Pin #	Pin Description	Signal Name	Pin #	Pin Description	Signal Name
19	PCIe TX Differential signal defined by the PCI Express M.2 spec	PETp2	36	Not Used	NC
20	Not Used	NC	37	PCIe RX Differential signal defined by the PCI Express M.2 spec	PERp1
21	Ground	GND	38	Not Used	NC
22	Not Used	NC	39	Ground	GND
23	PCIe RX Differential signal defined by the PCI Express M.2 spec	PERn2	40	Not Used	NC
24	Not Used	NC	41	PCIe TX Differential signal defined by the PCI Express M.2 spec	PETn0
25	PCIe RX Differential signal defined by the PCI Express M.2 spec	PERp2	42	Not Used	NC
26	Not Used	NC	43	PCIe TX Differential signal defined by the PCI Express M.2 spec	PETp0
27	Ground	GND	44	Not Used	NC
28	Not Used	NC	45	Ground	GND
29	PCIe TX Differential signal defined by the PCI Express M.2 spec	PETn1	46	Not Used	NC
30	Not Used	NC	47	PCIe RX Differential signal defined by the PCI Express M.2 spec	PERn0
31	PCIe TX Differential signal defined by the PCI Express M.2 spec	PETp1	48	Not Used	NC
32	Not Used	NC	49	PCIe RX Differential signal defined by the PCI Express M.2 spec	PERp0
33	Ground	GND	50	PE-Reset is a functional reset to the card as defined by the PCIe Mini CEM specification.	PERST#(I)(0/3.3V)
34	Not Used	NC	51	Ground	GND
35	PCIe RX Differential signal defined by the PCI Express M.2 spec	PERn1	52	Clock Request is a reference clock request signal as defined by the PCIe Mini CEM specification; Also used by L1 PM Substates.	CLKREQ#(I/O)(0/3.3V)

Pin #	Pin Description	Signal Name	Pin #	Pin Description	Signal Name
53	PCIe Reference Clock signals (100 MHz) defined by the PCI Express M.2 spec.	REFCLKn	65	Module Key	Key
54	Not Used	NC	66	Module Key	Key
55	PCIe Reference Clock signals (100 MHz) defined by the PCI Express M.2 spec.	REFCLKp	67	Not Used	NC
56	Manufacturing Data line. Used for SSD manufacturing only. Not used in normal operation. Pins should be left N/C in platform Socket.	Reserved for MFG DATA	68	Not Used	NC
57	Ground	GND	69	Not Used	NC
58	Manufacturing Data line. Used for SSD manufacturing only. Not used in normal operation. Pins should be left N/C in platform Socket.	Reserved for MFG CLOCK	70	3.3V power in	+3.3V
59	Module Key	Key	71	Ground	GND
60	Module Key	Key	72	3.3V power in	+3.3V
61	Module Key	Key	73	Ground	GND
62	Module Key	Key	74	3.3V power in	+3.3V
63	Module Key	Key	75	Ground	GND
64	Module Key	Key			

2.4 Environmental Specifications

Type		Value
Temperature	Standard Temperature Operating: Standard Temperature Storage: Wide Temperature Operating: Wide Temperature Storage:	0˚C~70˚C -40˚C~85˚C -40˚C~85˚C -50˚C~95˚C
Humidity	Operating & Storage	10~95%, Non-Condensing
Vibration	Non-Operating	20G, 10Hz~2000Hz
Shock	Non-Operating	1500G, 0.5ms

2.5 Mechanical Specifications

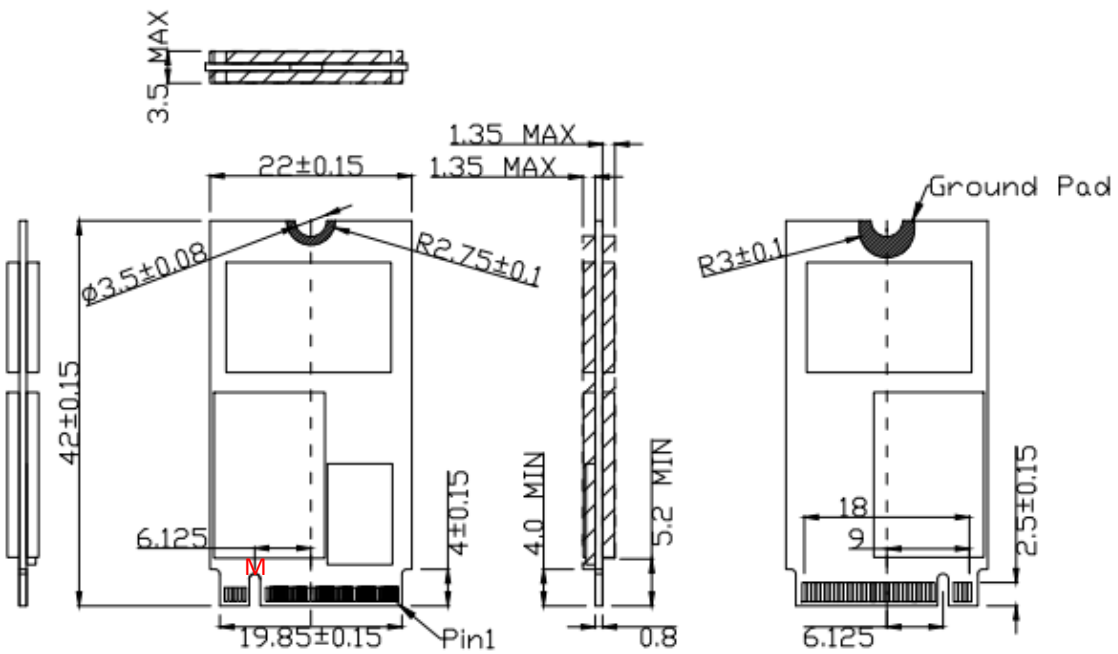

Type	Standard Temperature Default with Graphene Thermal Film
Form Factor	M.2 2242 (M)
Length	42.00mm +/-0.15mm
Width	22.00mm +/-0.15mm
Thickness	3.65mm +/-0.15mm

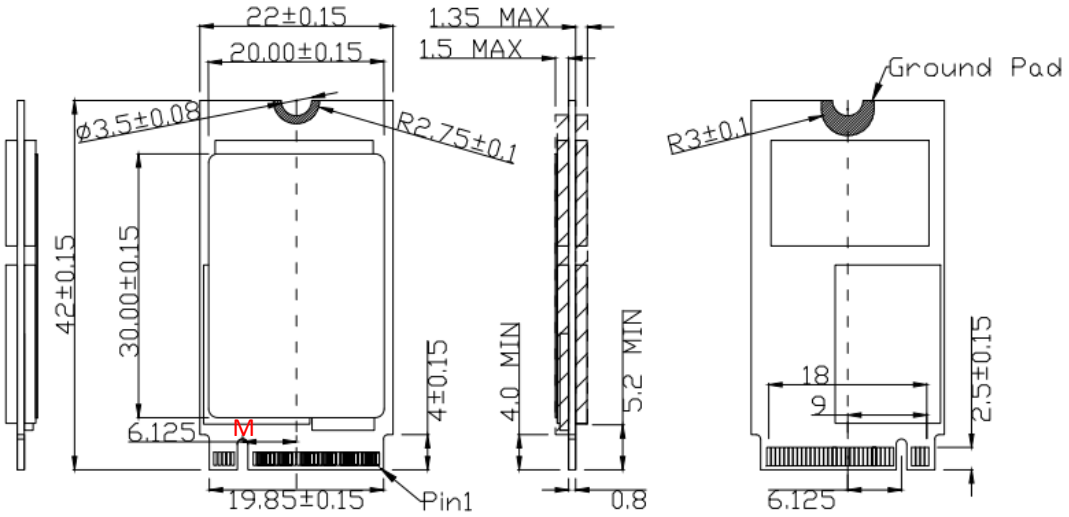

Type	Wide Temperature Default With Heatsink
Form Factor	M.2 2242 (M)
Length	42.00mm +/-0.15mm
Width	22.00mm +/-0.15mm
Thickness	7.20mm +/-0.15mm

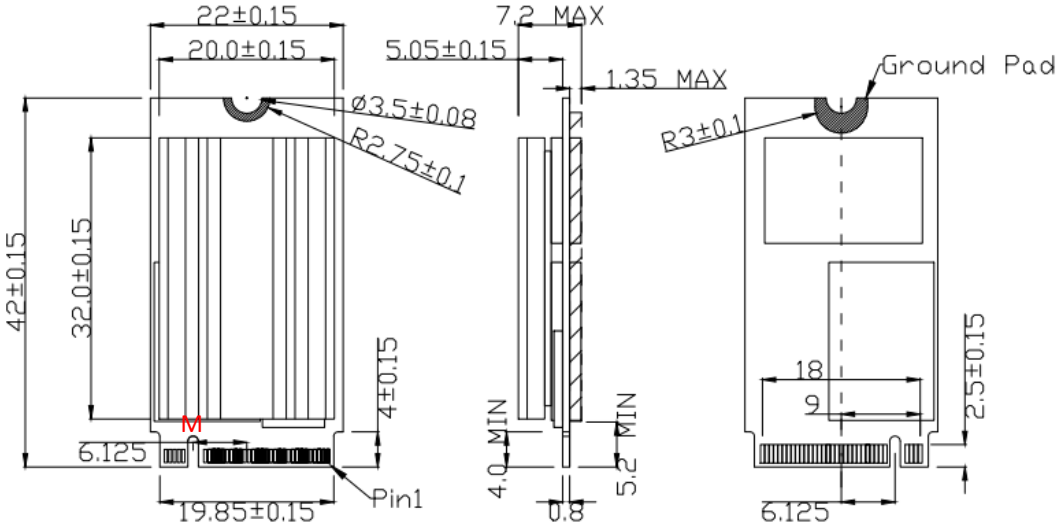

3. Supported Command

3.1 List of Command Sets

Admin Commands	
Code	**Description**
00h	Delete I/O Submission Queue
01h	Create I/O Submission Queue
02h	Get Log Page
04h	Delete I/O Completion Queue
05h	Create I/O Completion Queue
06h	Identify
08h	Abort
09h	Set Features
0Ah	Get Features
0Ch	Asynchronous Event Request
10h	Firmware Commit
11h	Firmware Image Download
80h	Format NVM
81h	Security Send
82h	Security Receive
84h	Sanitize
NVM Commands	
Code	**Description**
00h	Flush
01h	Write
02h	Read
04h	Write Uncorrectable
08h	Write Zeroes
09h	Dataset Management

4. Part No. Decoder

4.1 Part No. Decoder

1	-	2	3	4	5	6	7	8	9
Product Line	-	Form Factor	Product Series	Cervoz Family Code (Bus / Internal Control)	NAND Flash	Flash Capacity	Flash Mode	Module Capacity	Operating Temp.
XXX	-	XX	X	XXX	X	X	X	XXXX	X

1. Product Line

CIS	Cervoz Industrial SSD
CIM	Cervoz Industrial Memory Card
CIE	Cervoz Industrial Embedded Module

2. Form Factor

2S	2.5” SATA
2P	2.5” PATA
CF	CompactFlash
CA	CFast
MS	mSATA
HM	Half Size mSATA
HS	Half Slim
M3	M.2 2230
M4	M.2 2242
M6	M.2 2260
M8	M.2 2280
0V	PATA Disk 40pin Vertical
4V	PATA Disk 44pin Vertical
4L	PATA Disk 44pin Horizontal Left
7T	SATA Disk 7pin Vertical Tall
7S	SATA Disk 7pin Vertical Short
7L	SATA Disk 7pin Horizontal Left
7R	SATA Disk 7pin Horizontal Right

3. Product Series

S	Supreme Series (SLC)
R	Reliance Series (RO-MLC)
M	Momentum Series (MLC)
T	Titan Series (TLC)

4. Cervoz Family Code

Bus and Internal Control for Cervoz Product Families

5. NAND Flash

M	Micron
K	Kioxia
O	OEM NAND Flash

6. Flash Capacity

A	256Mb
B	512Mb
C	1Gb
D	2Gb
E	4Gb
F	8Gb
G	16Gb
H	32Gb
I	64Gb
J	128Gb
K	256Gb
L	512Gb
M	1Tb
N	2Tb
O	4Tb

7. Flash Mode

Internal Control for Flash Mode

8. Module Capacity

128M	128MB
256M	256MB
512M	512MB
001G	1GB
002G	2GB
004G	4GB
008G	8GB
016G	16GB
032G	32GB
064G	64GB
128G	128GB
256G	256GB
512G	512GB
001T	1TB
002T	2TB

9. Operating Temperature

S	Standard Grade (0~ +70°C)
W	Wide Temperature Grade (-40 ~ +85°C)