Cervoz Industrial Embedded Module

M.2 2280 NVMe

Titan Series (3D TLC)

T405 Family

Product Datasheet

Date: 2025.11.14

Revision: 2.1

File: Cervoz_Industrial_Embedded_Module_M.2_2280_T405_Datasheet_Rev2.1

Revision History

Date	Revision	Description
2019.05.30	Preliminary	First Released
2019.08.30	1.0	128GB Added
2020.07.30	1.1	* Added Graphene Thermal Film to Standard Temperature Solution * Wide Temperature Solution Added
2021.08.25	1.2	Performance Updated
2022.12.30	1.3	MTBF and TBW Updated
2025.06.10	2.0	New Manufacturing Process for NAND Flash IC 1.3 Ordering Information Changed 2.2 Performance Updated
2025.11.14	2.1	New heatsink implementation

Table of Contents

1. Product Overview……4
1.1 Introduction……4
1.2 Feature……4
1.3 Product Appearance & Models……5

2. Product Specifications……6
2.1 General Specifications……6
2.2 Performance……6
2.3 Electronic Specifications……7
2.3.1 Block Diagram……7
2.3.2 Pin Assignment……7-9
2.4 Environmental Specifications……10
2.5 Mechanical Specifications……10~12

3. Supported Command……13
3.1 List of Command Sets……13

4. Part No. Decoder……14
4.1 Part No. Decoder……14~15

1. Product Overview

1.1 Introduction

Cervoz Industrial M.2 2280 Embedded Module T405 family is a Solid State Flash Disk product that is in compliance with the M.2 and PCIe Gen3x4 standards. M.2 2280 T405 family fits in any M.2 2280(M) sockets in a PC or motherboard; it can be used for both booting and storage purposes.

T405 family uses SSD grade quality 3D TLC flash memory from the industry leading manufacturer Micron. Cervoz's firmware builds in a powerful ECC algorithm call Low-Density Parity Check (LDPC) decoding to improve data reliability. Meanwhile, M.2 2280 T405 family with heatsink design to heat dissipation effectively and achieve the best performance. This product includes various capacities to choose from.

T405 family offers outstanding performance and reliability; the product family is a perfect solution for multi-tasking capabilities and general industrial applications.

1.2 Feature

- Compliant with PCIe Gen3x4 interface (backward compatible to PCIe Gen 2 and Gen 1)
- Compliance:
  - NVMe 1.3
  - PCI Express Base 3.1
- 3D TLC flash memory
- Capacity: 128GB ~ 1TB
- End-to-End data protection
- SLC write cache technology
- Thermal throttling
- Operating as boot disk
- Static and dynamic wear leveling
- Bad block management
- S.M.A.R.T. & TRIM command
- Power Saving Modes:
  - Support APST
  - Support ASPM
  - Support L1.2
- Fully compatible with Windows 8.1/10/11, Mac OS, and Linux*
- RoHS compliant

*Microsoft recommends when use the M.2 NVMe SSD the driver for windows 8.1 and above is required.
Mac and Linux system users need to make sure whether there is a driver support M.2 NVMe SSD or not.

1.3 Product Appearance & Models

Cervoz Industrial M.2 2280 Module T405

Standard Temperature Default with Graphene Thermal Film	Wide Temperature Default With Heatsink

T405 Family Standard Temp. (0°C ~ 70°C) Model No.	T405 Family Wide Temp. (-40°C ~ 85°C) Model No.	Capacity
CIE-M8T405MMH128GS	CIE-M8T405MMH128GW	128GB
CIE-M8T405MMH256GS	CIE-M8T405MMH256GW	256GB
CIE-M8T405MNH512GS	CIE-M8T405MNH512GW	512GB
CIE-M8T405MNH001TS	CIE-M8T405MNH001TW	1TB

Please Note:

Since certain storage capacity has to be reserved for firmware and controller management purposes; the physical capacity of the flash module will be approximately 92% of the indicated capacity. If you need to install an image that has the exact (or close to) the indicated size of the flash module, please choose your flash module with a greater capacity.

2. Product Specifications

2.1 General Specifications

Form Factor	M.2 PCIe 2280
Interface	PCIe Gen3x4 (backward compatible to PCIe Gen 2 and Gen 1)
Connector	M.2 2280 (M)
NAND Flash Type	3D TLC
Capacity	128GB/256GB/512GB/1TB
Sequential Read	up to 2605MB/s
Sequential Write	up to 1880MB/s
ECC Scheme	Applies the LDPC (Low Density Parity Check) of ECC algorithm
MTBF	>3,000,000 hours
TeraByte Written (TBW)	128GB : 219 256GB : 438 512GB : 875 1TB : 1750
Supply Voltage	3.3V DC +/-5%
Power Consumption	Active mode: < 2820mW Idle mode: < 1100mW
Dimension (LxWxH)	80.00*22.00*3.50mm

2.2 Performance

The performance was measured with below PC configuration:

- Platform: GIGABYTE Z270M-D3H
- RAM: Cervoz CIR-S4DUSS2404G (DDR4 4G 2400MHz)
- Operation Systems: Win10 64bit
- Testing Utility: Crystal Disk Mark v8.0.5 X64
- PCIe Gen3 performance

Capacity	128GB	256GB	512GB	1TB
Sequential Read (Q8T1)	1265MB/s	2520MB/s	2600MB/s	2605MB/s
Sequential Write (Q8T1)	740MB/s	1435MB/s	1850MB/s	1880MB/s
4KB Random Read (Q8T8)	50K IOPS	90K IOPS	170K IOPS	230K IOPS
4KB Random Write (Q8T8)	140K IOPS	250K IOPS	280K IOPS	290K IOPS

Actual performance might differ based on different using conditions and environment.

2.3 Electronic Specifications

2.3.1 Block Diagram

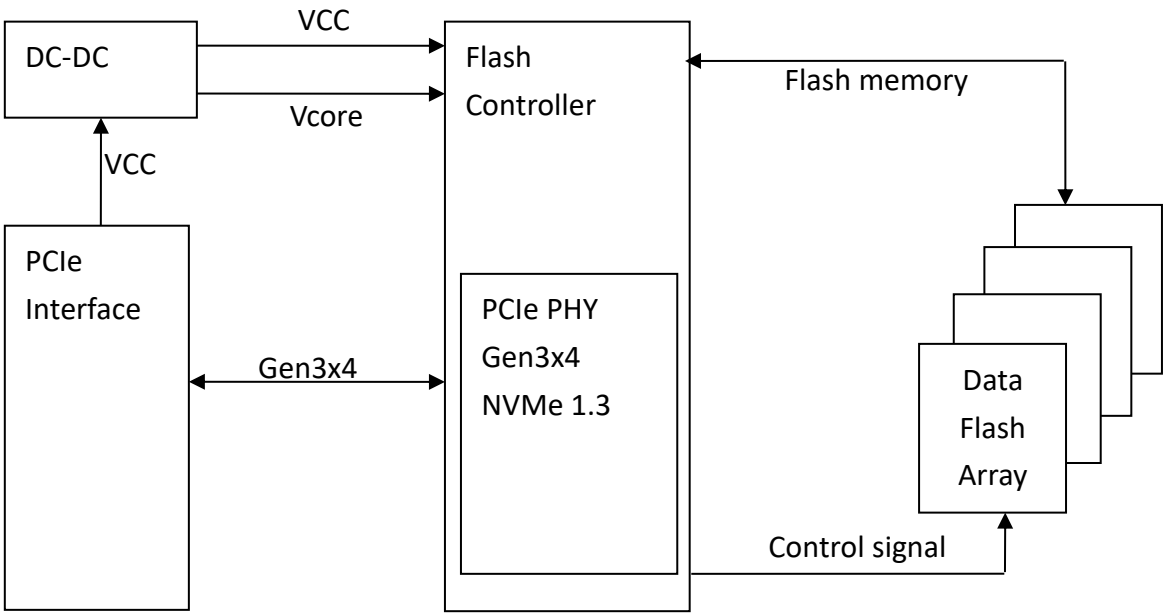

2.3.2 Pin Assignment

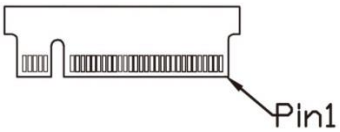

Pin #	Pin Description	Signal Name	Pin #	Pin Description	Signal Name
1	Ground	GND	10	Status indicators via LED devices	LED1#(O)
2	3.3V power in	+3.3V	11	PCIe RX Differential signal defined by the PCI Express M.2 spec	PERn3
3	Ground	GND	12	3.3V power in	+3.3V
4	3.3V power in	+3.3V	13	PCIe RX Differential signal defined by the PCI Express M.2 spec	PERp3
5	PCIe TX Differential signal defined by the PCI Express M.2 spec	PETn3	14	3.3V power in	+3.3V
6	Not Used	NC	15	Ground	GND
7	PCIe TX Differential signal defined by the PCI Express M.2 spec	PETp3	16	3.3V power in	+3.3V
8	Not Used	NC	17	PCIe TX Differential signal defined by the PCI Express M.2 spec	PETn2
9	Ground	GND	18	3.3V power in	+3.3V

Pin #	Pin Description	Signal Name	Pin #	Pin Description	Signal Name
19	PCIe TX Differential signal defined by the PCI Express M.2 spec	PETp2	36	Not Used	NC
20	Not Used	NC	37	PCIe RX Differential signal defined by the PCI Express M.2 spec	PERp1
21	Ground	GND	38	Not Used	NC
22	Not Used	NC	39	Ground	GND
23	PCIe RX Differential signal defined by the PCI Express M.2 spec	PERn2	40	Not Used	NC
24	Not Used	NC	41	PCIe TX Differential signal defined by the PCI Express M.2 spec	PETn0
25	PCIe RX Differential signal defined by the PCI Express M.2 spec	PERp2	42	Not Used	NC
26	Not Used	NC	43	PCIe TX Differential signal defined by the PCI Express M.2 spec	PETp0
27	Ground	GND	44	Not Used	NC
28	Not Used	NC	45	Ground	GND
29	PCIe TX Differential signal defined by the PCI Express M.2 spec	PETn1	46	Not Used	NC
30	Not Used	NC	47	PCIe RX Differential signal defined by the PCI Express M.2 spec	PERn0
31	PCIe TX Differential signal defined by the PCI Express M.2 spec	PETp1	48	Not Used	NC
32	Not Used	NC	49	PCIe RX Differential signal defined by the PCI Express M.2 spec	PERp0
33	Ground	GND	50	PE-Reset is a functional reset to the card as defined by the PCIe Mini CEM specification.	PERST#(I)(0/3.3V)
34	Not Used	NC	51	Ground	GND
35	PCIe RX Differential signal defined by the PCI Express M.2 spec	PERn1	52	Clock Request is a reference clock request signal as defined by the PCIe Mini CEM specification; Also used by L1 PM Substates.	CLKREQ#(I/O)(0/3.3V)

Pin #	Pin Description	Signal Name	Pin #	Pin Description	Signal Name
53	PCIe Reference Clock signals (100 MHz) defined by the PCI Express M.2 spec.	REFCLKn	65	Module Key	Key
54	PCIe PME Wake. Open Drain with pull up on platform; Active Low.	PEWAKE#(I/O)(0/3.3V)	66	Module Key	Key
55	PCIe Reference Clock signals (100 MHz) defined by the PCI Express M.2 spec.	REFCLKp	67	Not Used	NC
56	Manufacturing Data line. Used for SSD manufacturing only. Not used in normal operation. Pins should be left N/C in platform Socket.	Reserved for MFG DATA	68	32.768 kHz clock supply input that is provided by the platform chipset to reduce power and cost for the module.	SUSCLK(32KHz) (I)(0/3.3V)
57	Ground	GND	69	Not Used	NC
58	Manufacturing Data line. Used for SSD manufacturing only. Not used in normal operation. Pins should be left N/C in platform Socket.	Reserved for MFG CLOCK	70	3.3V power in	+3.3V
59	Module Key	Key	71	Ground	GND
60	Module Key	Key	72	3.3V power in	+3.3V
61	Module Key	Key	73	Ground	GND
62	Module Key	Key	74	3.3V power in	+3.3V
63	Module Key	Key	75	Not Used	GND
64	Module Key	Key			

2.4 Environmental Specifications

Type		Value
Temperature	Standard Temperature Operating: Standard Temperature Storage: Wide Temperature Operating: Wide Temperature Storage:	0˚C~70˚C -40˚C~85˚C -40˚C~85˚C -50˚C~95˚C
Humidity	Operating & Storage	10~95%, Non-Condensing
Vibration	Non-Operating	20G, 10Hz~2000Hz
Shock	Non-Operating	1500G, 0.5ms

2.5 Mechanical Specifications

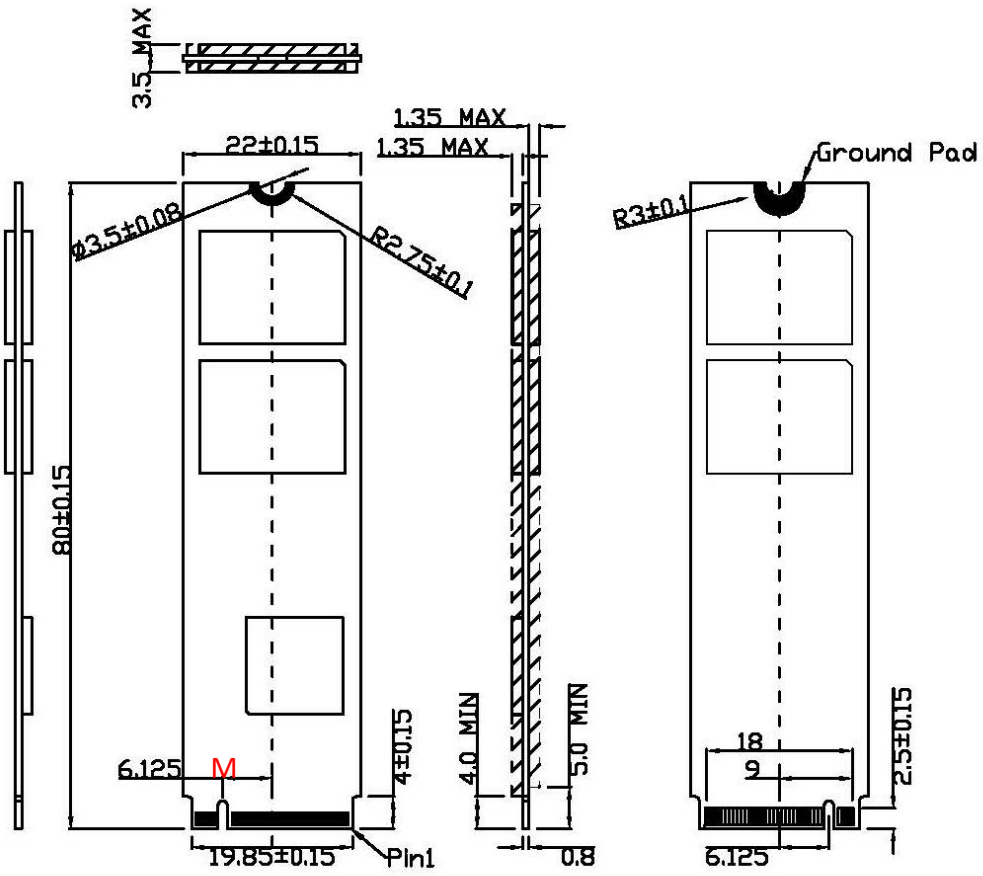

Type	Standard Temperature Default with Graphene Thermal Film
Form Factor	M.2 2280 (M)
Length	80.00mm +/-0.15mm
Width	22.00mm +/-0.15mm
Thickness	3.65mm +/-0.08mm

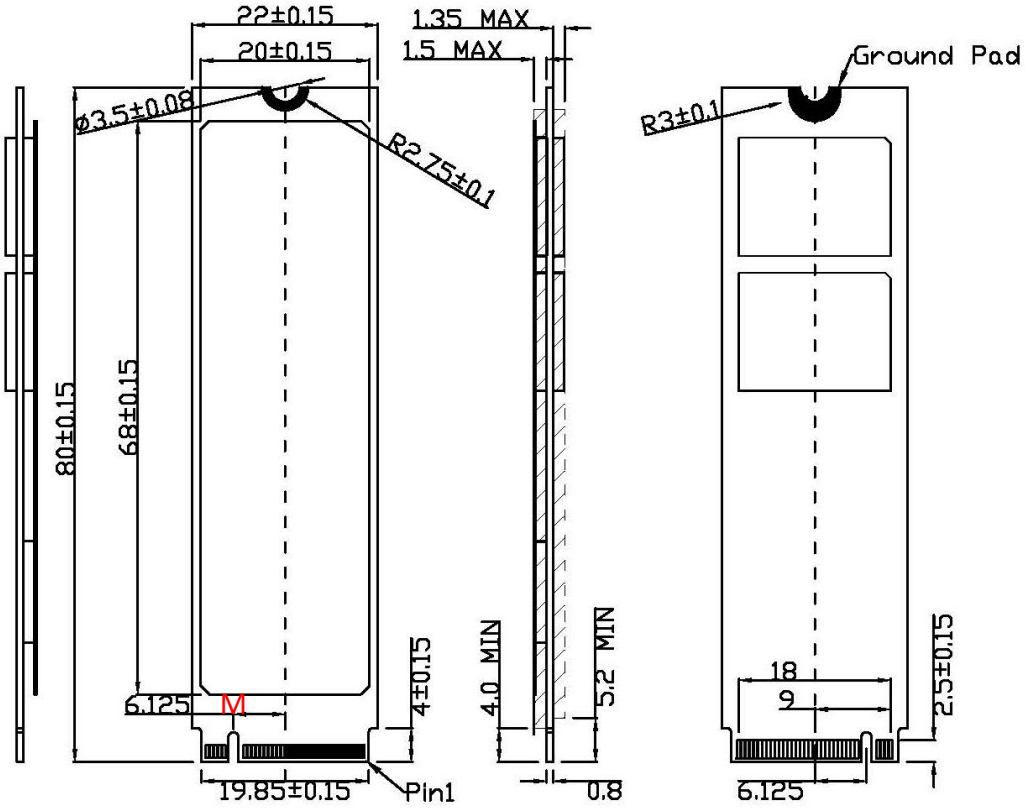

Type	Wide Temperature Default With Heatsink
Form Factor	M.2 2280 (M)
Length	80.00mm +/-0.15mm
Width	23.00mm +/-0.10mm
Thickness	14.50mm +/-0.08mm

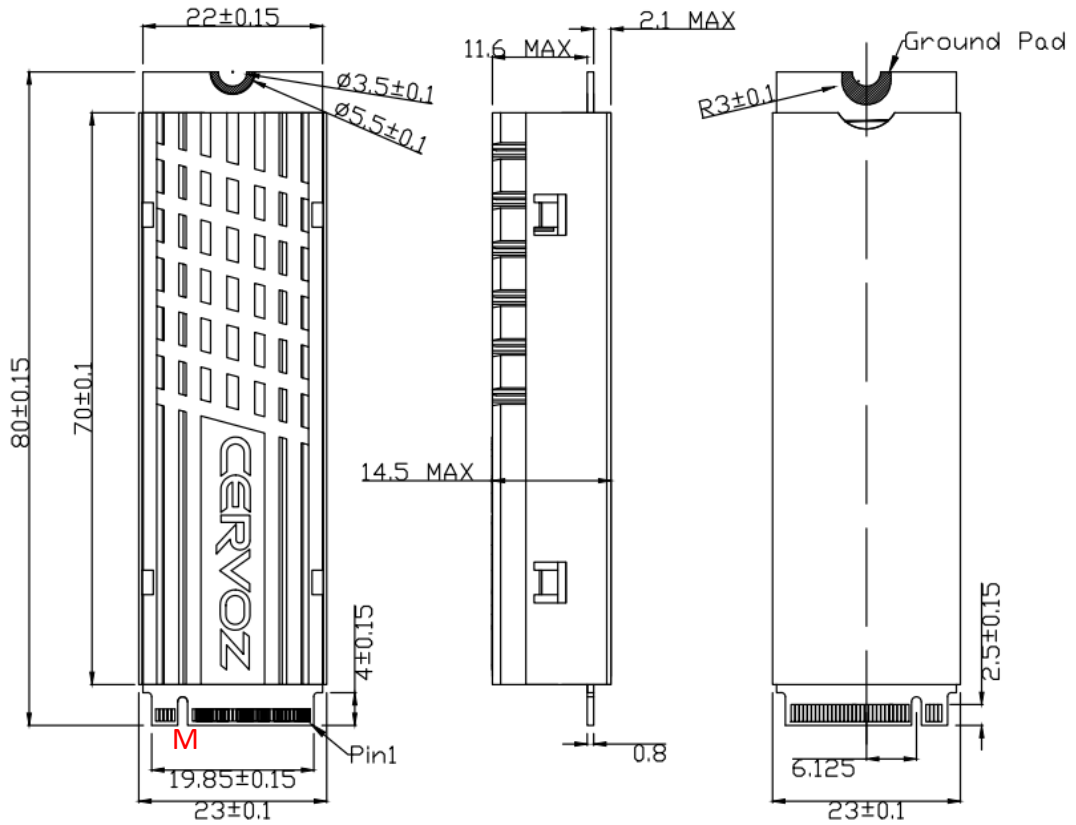

3. Supported Command

3.1 List of Command Sets

Admin Commands	
Code	**Description**
00h	Delete I/O Submission Queue
01h	Create I/O Submission Queue
02h	Get Log Page
04h	Delete I/O Completion Queue
05h	Create I/O Completion Queue
06h	Identify
08h	Abort
09h	Set Features
0Ah	Get Features
0Ch	Asynchronous Event Request
10h	Firmware Activate
11h	Firmware Image Download
Admin Commands – NVM Command Set Specific	
Code	**Description**
80h	Format NVM
81h	Security Send
82h	Security Receive
NVM Commands	
Code	**Description**
00h	Flush
01h	Write
02h	Read
04h	Write Uncorrectable
08h	Write Zeroes
09h	Dataset Management

4. Part No. Decoder

4.1 Part No. Decoder

1	-	2	3	4	5	6	7	8	9
Product Line	-	Form Factor	Product Series	Cervoz Family Code (Bus / Internal Control)	NAND Flash	Flash Capacity	Flash Mode	Module Capacity	Operating Temp.
XXX	-	XX	X	XXX	X	X	X	XXXX	X

1. Product Line

CIS	Cervoz Industrial SSD
CIM	Cervoz Industrial Memory Card
CIE	Cervoz Industrial Embedded Module

2. Form Factor

2S	2.5” SATA
2P	2.5” PATA
CF	CompactFlash
CA	CFast
MS	mSATA
HM	Half Size mSATA
HS	Half Slim
M4	M.2 2242
M6	M.2 2260
M8	M.2 2280
0V	PATA Disk 40pin Vertical
4V	PATA Disk 44pin Vertical
4L	PATA Disk 44pin Horizontal Left
7T	SATA Disk 7pin Vertical Tall
7S	SATA Disk 7pin Vertical Short
7L	SATA Disk 7pin Horizontal Left
7R	SATA Disk 7pin Horizontal Right

3. Product Series

S	Supreme Series (SLC)
R	Reliance Series (RO-MLC)
M	Momentum Series (MLC)
T	Titan Series (TLC)

4. Cervoz Family Code

Bus and Internal Control for Cervoz Product Families

5. NAND Flash

M	Micron
K	Kioxia

6. Flash Capacity

A	256Mb
B	512Mb
C	1Gb
D	2Gb
E	4Gb
F	8Gb
G	16Gb
H	32Gb
I	64Gb
J	128Gb
K	256Gb
L	512Gb
M	1Tb
N	2Tb
O	4Tb

7. Flash Mode

Internal Control for Flash Mode

8. Module Capacity

128M	128MB
256M	256MB
512M	512MB
001G	1GB
002G	2GB
004G	4GB
008G	8GB
016G	16GB
032G	32GB
064G	64GB
128G	128GB
256G	256GB
512G	512GB
001T	1TB
002T	2TB

9. Operating Temperature

S	Standard Grade (0~ +70°C)
W	Wide Temperature Grade (-40 ~ +85°C)