Cervoz Industrial Embedded Module

M.2 2280 NVMe

Titan Series (TLC NAND)

T436 Family

Product Datasheet

Date: 2023.02.06

Revision: 1.1

File: Cervoz_Industrial_Embedded_Module_M.2_2280_T436_Datasheet_Rev1.1

Revision History

Date	Revision	Description
2022.12.20	1.0	First Released
2023.02.06	1.1	Ordering Information Changed

Table of Contents

1. Product Overview……4
1.1 Introduction……4
1.2 Feature……4~5
1.3 Product Appearance & Models……5

2. Product Specifications……6
2.1 General Specifications……6
2.2 Performance……6
2.3 Electronic Specifications……7
2.3.1 Block Diagram……7
2.3.2 Pin Assignment……7~9
2.4 Environmental Specifications……10
2.5 Mechanical Specifications……10~12

3. Supported Command……13
3.1 List of Command Sets……13~14

4. Part No. Decoder……15
4.1 Part No. Decoder……15~16

1. Product Overview

1.1 Introduction

Cervoz Industrial M.2 2280 Embedded Module T436 family is a Solid State Flash Disk product that is in compliance with the M.2 and PCIe Gen3x4 standards. M.2 2280 T436 family fits in any M.2 2280(M) sockets in a PC or motherboard; it can be used for both booting and storage purposes. In addition, T436 family has a very unique function named Powerguard. The purpose of Powerguard is to protect data loss while encountering an improper power failure. Powerguard would complete the task of saving the boot files from the controller into the flash storage after sudden power loss. Cervoz designs these flash modules with additional tantalum capacitors to store these extra charges. With this special design, M.2 2280 is constantly charging the tantalum capacitors with 12V power during its operation.

T436 family uses SSD grade quality TLC flash memory from the industry leading manufacturer Kioxia. Cervoz's firmware builds in a powerful ECC algorithm call Low-Density Parity Check (LDPC) decoding to improve data reliability. Meanwhile, M.2 2280 T436 family with heatsink design to heat dissipation effectively and achieve the best performance. This product includes various capacities to choose from.

T436 family offers outstanding performance and reliability; the product family is a perfect solution which strives for multi-tasking capabilities, high efficiency and data protection in specific industrial applications.

1.2 Feature

- Compliant with PCIe Gen3x4 interface (backward compatible to PCIe Gen 2 and Gen 1)
- Compliance:
  - NVMe 1.3
  - PCI Express Base 3.1
- TLC NAND flash memory
- Capacity: 240GB ~ 1920GB
- Powerguard Function (Power Loss Protection)
- Support AES 256-bit Encryption
- With DRAM Buffer
- End-to-End data protection
- Dynamic Thermal throttling
- Operating as boot disk
- Static and dynamic wear leveling
- Bad block management
- S.M.A.R.T. & TRIM command
- Power Saving Modes:
  - Support APST
  - Support ASPM
  - Support L1.2
- Fully compatible with Windows 8.1, Windows 10, Windows 11, Mac OS, and Linux*

- RoHS compliant

*Cervoz recommends when use the M.2 NVMe SSD the driver for windows 8.1 and above is required.
Mac and Linux system users need to make sure whether there is a driver support M.2 NVMe SSD or not.

1.3 Product Appearance & Models

Cervoz Industrial M.2 2280 Module T436

Standard Temperature Default with Graphene Thermal Film	Wide Temperature Default With Heatsink

T436 Family Standard Temp. (0°C ~ 70°C) Model No.	T436 Family Wide Temp. (-40°C ~ 85°C) Model No.	Capacity
CIE-M8T436KMG240GS	CIE-M8T436KMG240GW	240GB
CIE-M8T436KMG480GS	CIE-M8T436KMG480GW	480GB
CIE-M8T436KNG960GS	CIE-M8T436KNG960GW	960GB
CIE-M8T436KOG1920S	-	1920GB

Please Note:

Since certain storage capacity has to be reserved for firmware and controller management purposes; the physical capacity of the flash module will be approximately 93.1% of the indicated capacity. If you need to install an image that has the exact (or close to) the indicated size of the flash module, please choose your flash module with a greater capacity.

2. Product Specifications

2.1 General Specifications

Form Factor	M.2 PCIe 2280
Interface	PCIe Gen3x4 (backward compatible to PCIe Gen 2 and Gen 1)
Connector	M.2 2280 (M)
NAND Flash Type	TLC NAND
Capacity	Standard Temp.: 240GB/480GB/960GB/1920GB Wide Temp.: 240GB/480GB/960GB
Sequential Read	up to 3,445MB/s
Sequential Write	up to 1,000MB/s
DRAM Buffer	Included
ECC Scheme	Applies the LDPC (Low Density Parity Check) of ECC algorithm
MTBF	>3,000,000 hours
TeraByte Written (TBW)	240GB : 352 480GB : 703 960GB : 1406 1920GB : 2813
Low Power Management	APST/ASPM mode
Supply Voltage	3.3V DC +/-5%
Power Consumption	Active mode: < 6,000mW Idle mode: < 2,000mW
Dimension (LxWxH)	80.00*22.00*4.15mm

2.2 Performance

The performance was measured with below PC configuration:

- Platform: ASRock Z590M Pro4
- RAM: Cervoz CIR-S4DUSY3216G (DDR4 16G 3200MHz)
- Operation Systems: Win10 64bit
- Testing Utility: Crystal Disk Mark v8.0.4 x64 and IOMeter, 1GB range
- PCIe Gen3 performance

Capacity	240GB	480GB	960GB	1920GB
Sequential Read (Q32T1)	1,460 MB/s	3,445 MB/s	3,425 MB/s	3,435 MB/s
Sequential Write (Q32T1)	160 MB/s	365 MB/s	780 MB/s	1,000 MB/s
4KB Random Read (Q128T16)	50,000 IOPS	130,000 IOPS	250,000 IOPS	350,000 IOPS
4KB Random Write (Q128T16)	40,000 IOPS	80,000 IOPS	180,000 IOPS	240,000 IOPS

Actual performance might differ based on different using conditions and environment.

2.3 Electronic Specifications

2.3.1 Block Diagram

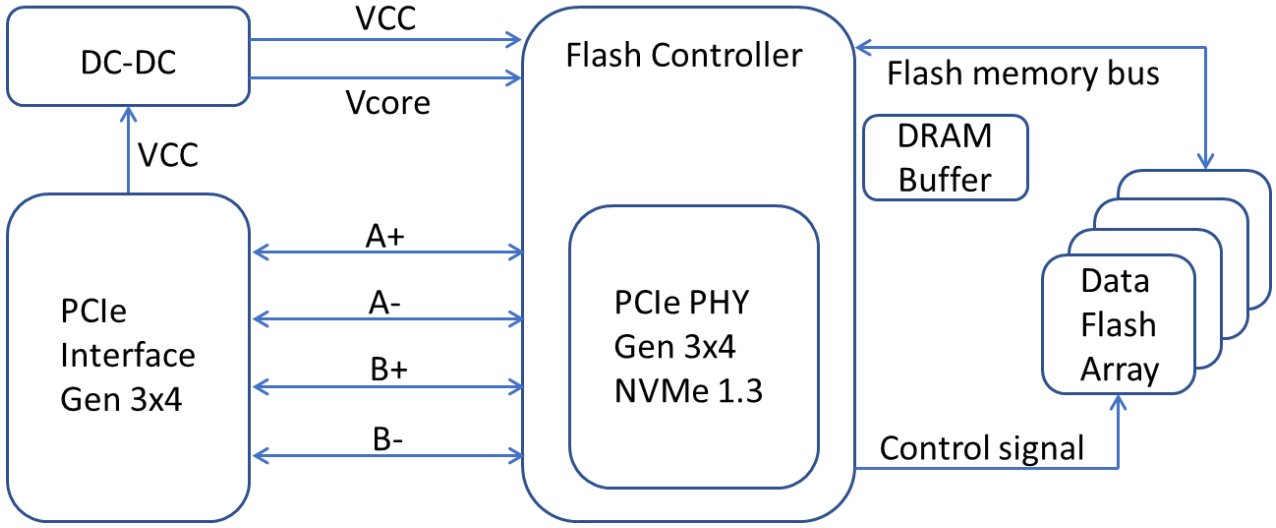

2.3.2 Pin Assignment

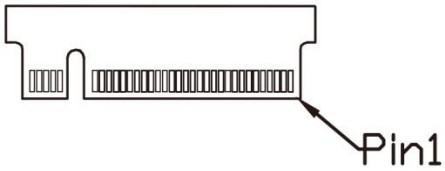

Pin #	Pin Description	Signal Name	Pin #	Pin Description	Signal Name
1	Ground	GND	8	Not Used	NC
2	3.3V power in	+3.3V	9	Ground	GND
3	Ground	GND	10	Open drain, active low signal. These signals are used to allow the add-in card to provide status indicators via LED devices that will be provided by the system.	LED1#
4	3.3V power in	+3.3V	11	PCIe RX Differential signal defined by the PCI Express M.2 spec	PERn3
5	PCIe TX Differential signal defined by the PCI Express M.2 spec	PETn3	12	3.3V power in	+3.3V
6	Not Used	NC	13	PCIe RX Differential signal defined by the PCI Express M.2 spec	PERp3
7	PCIe TX Differential signal defined by the PCI Express M.2 spec	PETp3	14	3.3V power in	+3.3V

Pin #	Pin Description	Signal Name	Pin #	Pin Description	Signal Name
15	Ground	GND	16	3.3V power in	+3.3V
17	PCIe RX Differential signal defined by the PCI Express M.2 spec	PETn2	18	3.3V power in	+3.3V
19	PCIe RX Differential signal defined by the PCI Express M.2 spec	PETp2	20	Not Used	NC
21	Ground	GND	22	Not Used	NC
23	PCIe RX Differential signal defined by the PCI Express M.2 spec	PERn2	24	Not Used	NC
25	PCIe RX Differential signal defined by the PCI Express M.2 spec	PERp2	26	Not Used	NC
27	Ground	GND	28	Not Used	NC
29	PCIe TX Differential signal defined by the PCI Express M.2 spec	PETn1	30	Not Used	NC
31	PCIe TX Differential signal defined by the PCI Express M.2 spec	PETp1	32	Not Used	NC
33	Ground	GND	34	Not Used	NC
35	PCIe RX Differential signal defined by the PCI Express M.2 spec	PERn1	36	Not Used	NC
37	PCIe RX Differential signal defined by the PCI Express M.2 spec	PERp1	38	Not Used	NC
39	Ground	GND	40	SMBus Clock; Open Drain with pull-up on platform.	SMB_CLK (I/O)(0/1.8V)
41	PCIe TX Differential signal defined by the PCI Express M.2 spec	PETn0	42	SMBus Data; Open Drain with pull-up on platform.	SMB_DATA (I/O)(0/1.8V)
43	PCIe TX Differential signal defined by the PCI Express M.2 spec	PETp0	44	-	ALERT#(O) (0/1.8V)
45	Ground	GND	46	Not Used	NC
47	PCIe RX Differential signal defined by the PCI Express M.2 spec	PERn0	48	Not Used	NC

Pin #	Pin Description	Signal Name	Pin #	Pin Description	Signal Name
49	PCIe RX Differential signal defined by the PCI Express M.2 spec	PERp0	50	PE-Reset is a functional reset to the card as defined by the PCIe Mini CEM specification.	PERST#(I) (0/3.3V)
51	Ground	GND	52	Clock Request is a reference clock request signal as defined by the PCIe Mini CEM specification; Also used by L1 PM Sub-states.	CLKREQ# (I/O)(0/3.3V)
53	PCIe Reference Clock signals (100 MHz) defined by the PCI Express M.2 spec.	REFCLKn	54	-	PEWAKE# (I/O)(0/3.3V)
55	PCIe Reference Clock signals (100 MHz) defined by the PCI Express M.2 spec.	REFCLKp	56	Manufacturing Data line.	Reserved for MFG DATA
57	Ground	GND	58	Manufacturing Clock line.	Reserved for MFG CLOCK
59	Module Key	Module Key M	60	Module Key	Module Key M
61	Module Key	Module Key M	62	Module Key	Module Key M
63	Module Key	Module Key M	64	Module Key	Module Key M
65	Module Key	Module Key M	66	Module Key	Module Key M
67	Not Used	NC	68	-	SUSCLK (32KHz) (I)(0/3.3V)
69	PEDET (NC-PCIe). No Connect for PCIe.	NC	70	3.3V power in	+3.3V
71	Ground	GND	72	3.3V power in	+3.3V
73	Ground	GND	74	3.3V power in	+3.3V
75	Ground	GND			

2.4 Environmental Specifications

Type		Value
Temperature	Standard Temperature Operating: Standard Temperature Storage: Wide Temperature Operating: Wide Temperature Storage:	0˚C~70˚C -40˚C~85˚C -40˚C~85˚C -50˚C~95˚C
Humidity	Operating & Storage	10~95%, Non-Condensing
Vibration	Non-Operating	20G, 10Hz~2000Hz
Shock	Non-Operating	1500G, 0.5ms

2.5 Mechanical Specifications

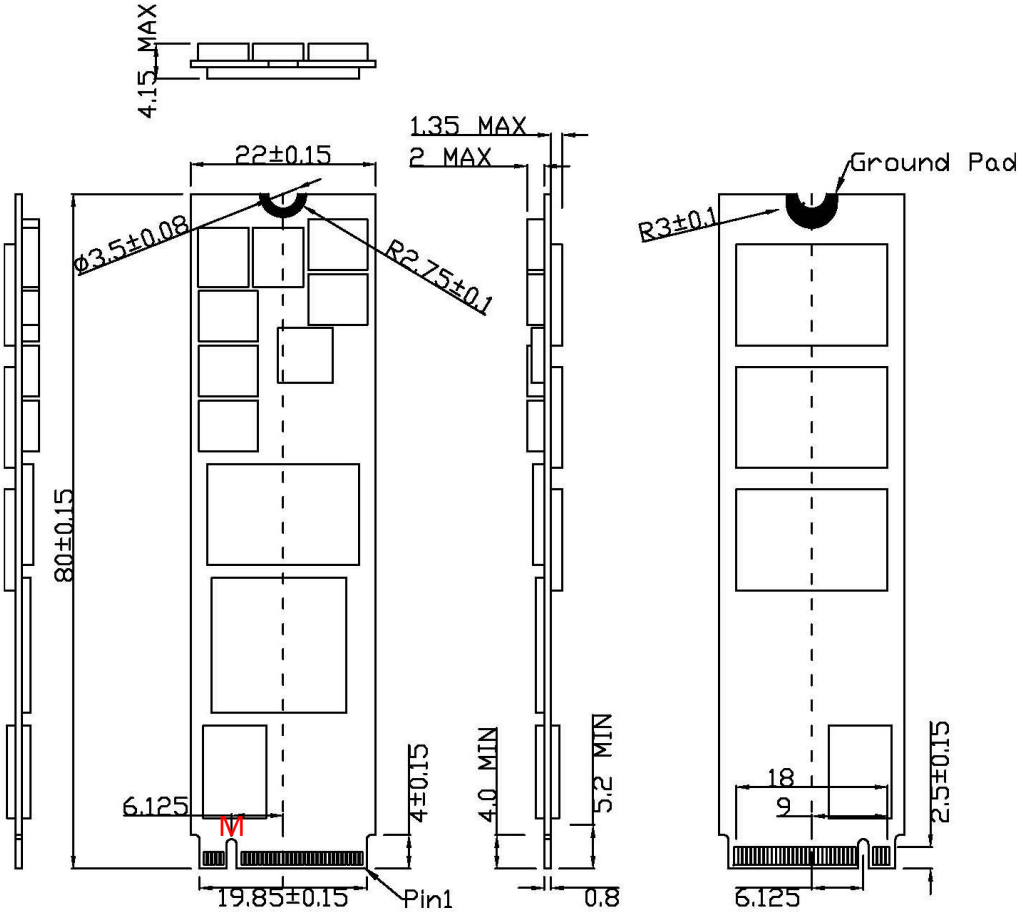

Type	Standard Temperature Default with Graphene Thermal Film
Form Factor	M.2 2280 (M)
Length	80.00mm +/-0.15mm
Width	22.00mm +/-0.15mm
Thickness	4.35mm +/-0.08mm

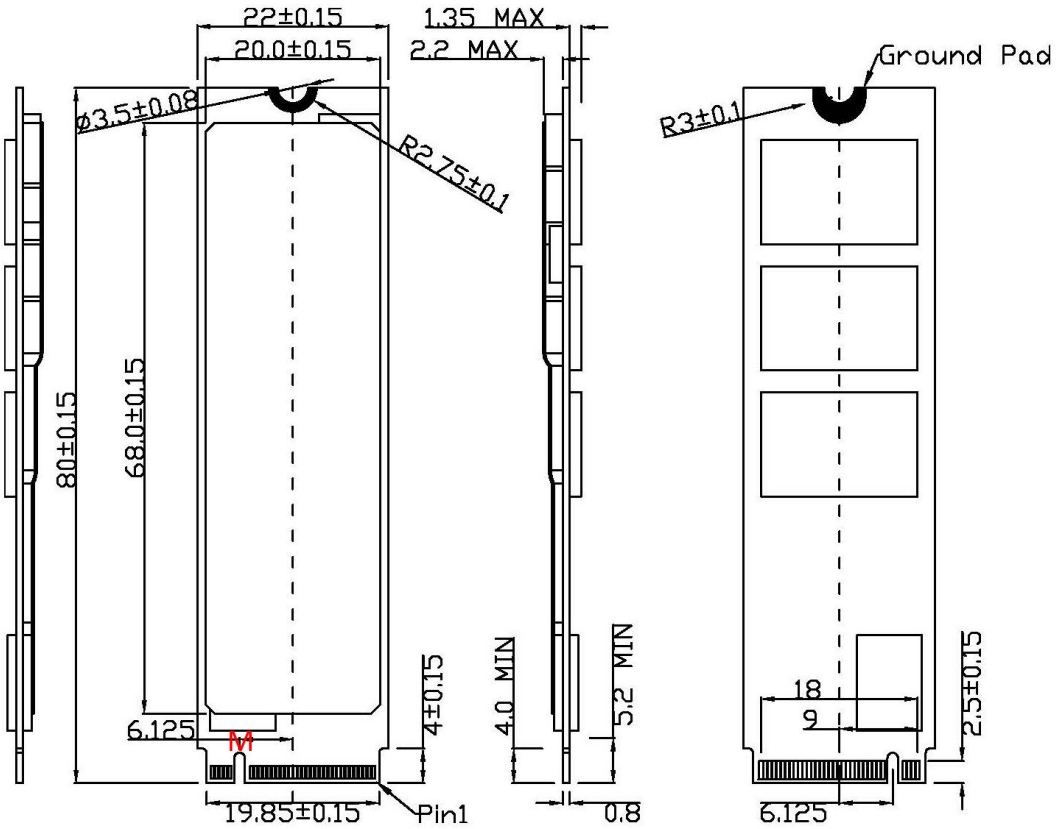

Type	Wide Temperature Default With Heatsink
Form Factor	M.2 2280 (M)
Length	80.00mm +/-0.15mm
Width	23.60mm +/-0.1mm
Thickness	15.45mm +/-0.08mm

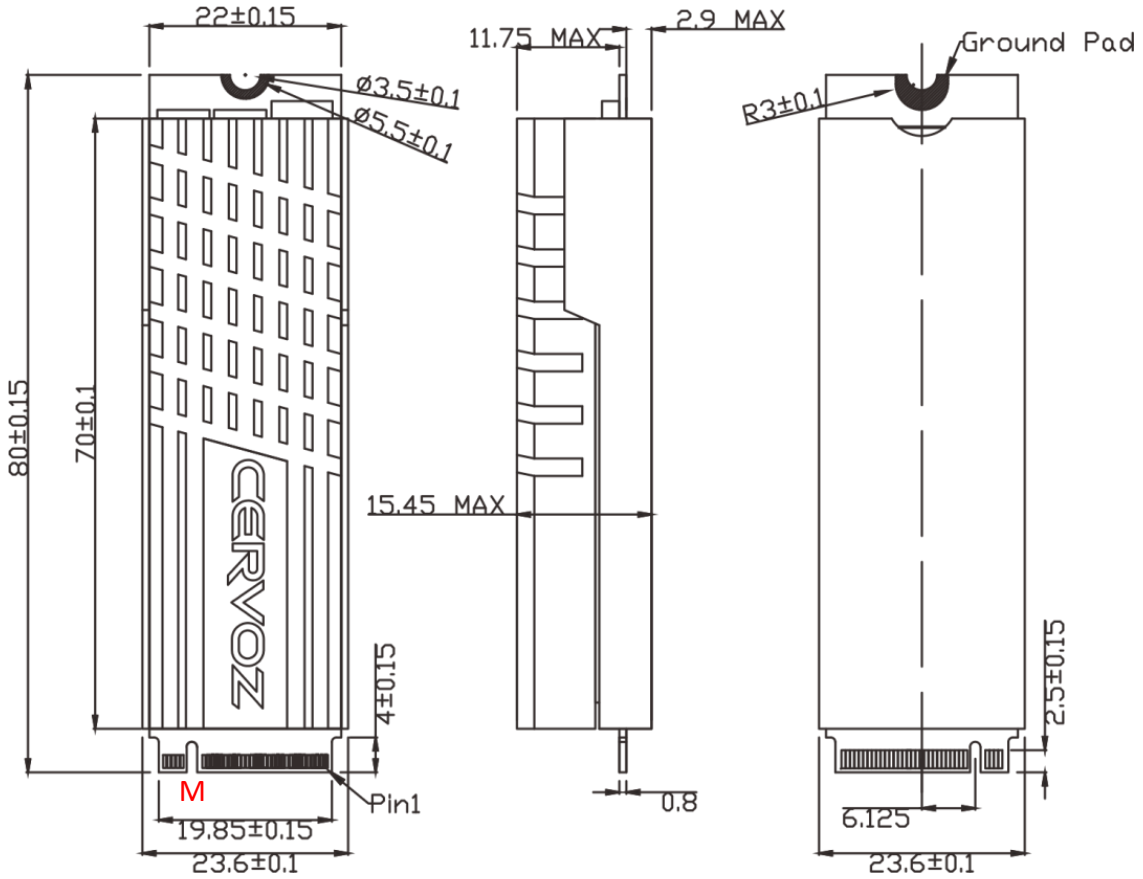

3. Supported Command

3.1 List of Command Sets

Admin Commands		
Code	**O/M**	**Description**
00h	M	Delete I/O Submission Queue
01h	M	Create I/O Submission Queue
02h	M	Get Log Page
04h	M	Delete I/O Completion Queue
05h	M	Create I/O Completion Queue
06h	M	Identify
08h	M	Abort
09h	M	Set Features
0Ah	M	Get Features
0Ch	M	Asynchronous Event Request
10h	O	Firmware Activate
11h	O	Firmware Image Download
14h	O	Device Self-test
80h	O	Format NVM
81h	O	Security Send
82h	O	Security Receive
84h	O	Sanitize
I/O Commands		
Code	**O/M**	**Description**
00h	O	Flush
01h	O	Write
02h	O	Read
04h	O	Write Uncorrectable
05h	O	Compare
08h	O	Write Zeroes
09h	O	Dataset Management

Set Feature Commands		
Code	**O/M**	**Description**
00h		Reserved
01h	M	Arbitration
02h	M	Power Management
03h	O	LBA Range Type
04h	M	Temperature Threshold
05h	M	Error Recovery
06h	O	Volatile Write Cache
07h	M	Number of Queues
08h	M	Interrupt Coalescing
09h	M	Interrupt Vector Configuration
0Ah	M	Write Atomicity Normal
0Bh	M	Asynchronous Event Configuration
0Ch	O	Autonomous Power State Transition
0Dh	O	Host Memory Buffer
0Eh	O	Timestamp
10h	O	Host Controlled Thermal Management
11h	O	Non-Operational Power State Config
0Eh – 7Dh		Reserved
80h	O	Software Progress Marker

Get Log Page Commands		
Code	**O/M**	**Description**
00h		Reserved
01h	M	Error Information
02h	M	SMART / Health Information
03h	M	Firmware Slot Information
04h	O	Changed Namespace List
06h	O	Device Self-test
09h – 7Fh		Reserved
81h	O	Sanitize Status
82h - FFh		Reserved

4. Part No. Decoder

4.1 Part No. Decoder

1	-	2	3	4	5	6	7	8	9
Product Line	-	Form Factor	Product Series	Cervoz Family Code (Bus / Internal Control)	NAND Flash	Flash Capacity	Flash Mode	Module Capacity	Operating Temp.
XXX	-	XX	X	XXX	X	X	X	XXXX	X

1. Product Line

CIS	Cervoz Industrial SSD
CIM	Cervoz Industrial Memory Card
CIE	Cervoz Industrial Embedded Module

2. Form Factor

2S	2.5” SATA
2P	2.5” PATA
CF	CompactFlash
CA	CFast
MS	mSATA
HM	Half Size mSATA
HS	Half Slim
M4	M.2 2242
M6	M.2 2260
M8	M.2 2280
0V	PATA Disk 40pin Vertical
4V	PATA Disk 44pin Vertical
4L	PATA Disk 44pin Horizontal Left
7T	SATA Disk 7pin Vertical Tall
7S	SATA Disk 7pin Vertical Short
7L	SATA Disk 7pin Horizontal Left
7R	SATA Disk 7pin Horizontal Right

3. Product Series

S	Supreme Series (SLC)
R	Reliance Series (RO-MLC)
M	Momentum Series (MLC)
T	Titan Series (TLC)

4. Cervoz Family Code

Bus and Internal Control for Cervoz Product Families

5. NAND Flash

M	Micron
K	Kioxia

6. Flash Capacity

A	256Mb
B	512Mb
C	1Gb
D	2Gb
E	4Gb
F	8Gb
G	16Gb
H	32Gb
I	64Gb
J	128Gb
K	256Gb
L	512Gb
M	1Tb
N	2Tb
O	4Tb

7. Flash Mode

Internal Control for Flash Mode

8. Module Capacity

128M	128MB
256M	256MB
512M	512MB
001G	1GB
002G	2GB
004G	4GB
008G	8GB
016G	16GB
032G	32GB
064G	64GB
128G	128GB
240G	240GB
256G	256GB
480G	480GB
512G	512GB
960G	960GB
001T	1TB
1920	1.92TB
002T	2TB

9. Operating Temperature

S	Standard Grade (0~ +70°C)
W	Wide Temperature Grade (-40 ~ +85°C)